SOLINA-PRO OPEN STYLE FOLDING ARM AWNING

COVERED
Day and Night

PREMIUM GERMAN TECHNOLOGY

COVERED | SOLINA-PRO OPEN STYLE FOLDING ARM AWNING

The Covered SOLINA-PRO Open Style Folding Arm Awning System is a practical solution for providing continuous shade and protection from the suns harmful rays.

German Engineering guarantees unparalleled technical strength in combination with a compact and stylish design.

The unique design allows for up to 7000mm (7m) coverage in width and 4000mm (4m) in projection making the Covered SOLINA-PRO ideal for covering larger areas.

Utilising a heavy-duty tortion bar makes mounting these awning systems to a variety of different fixing options a breeze.

All components are constructed of Marine Grade Stainless Steel and our optional hood profile is extruded from 6061 Structural Grade Aluminium.

“ Modern Design, Easy Handling. The open awning SOLINA-PRO convinces with its attractive appearance, stability and easy handling ”

SOLIDUX SOLINA-PRO

SOLIDUX SOLINA-PRO

SOLIDUX SOLINA-PRO

SOLIDUX SOLINA-PRO

OPEN STYLE AWNING

SQUARE BAR AT REAR MAKES INSTALLATION A BREEZE

SUPERIOR ARM TECHNOLOGY

FLUSH MOUNTING POSSIBLE

OPTIONAL RAIN HOOD AVAILABLE

5 YEAR WARRANTY

We guarantee our customers **5 YEARS** of perfect **SOLIDUX** quality on all architectural arm awnings, How can we do this? The mounting brackets made of extruded aluminium and all awning hardware are made of weather-resistant components.

OUR ICONS

ISO 9001:2008 | QUALITY APPROVED | VOICE CONTROL | CUSTOM APP | HOME AUTOMATION | SUN/UV PROTECTION | WIND RATING (upto 50kms) | HUGE COLOUR RANGE | EXTENSIVE FABRICS | LED LIGHTS

SOLIDUX®

PREMIUM GERMAN TECHNOLOGY

FASCIA FIX

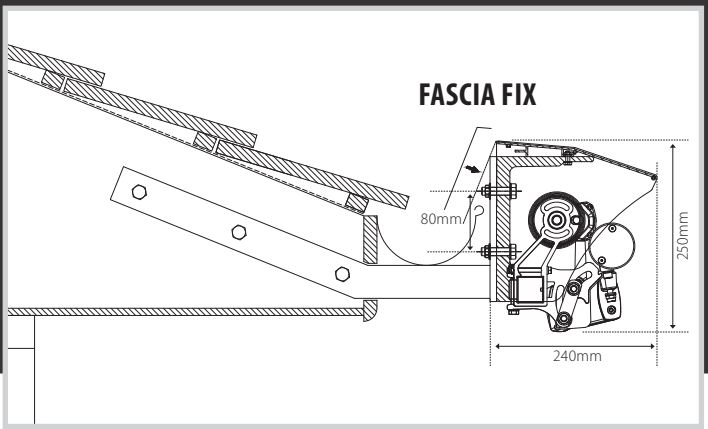

RAFTER FIX

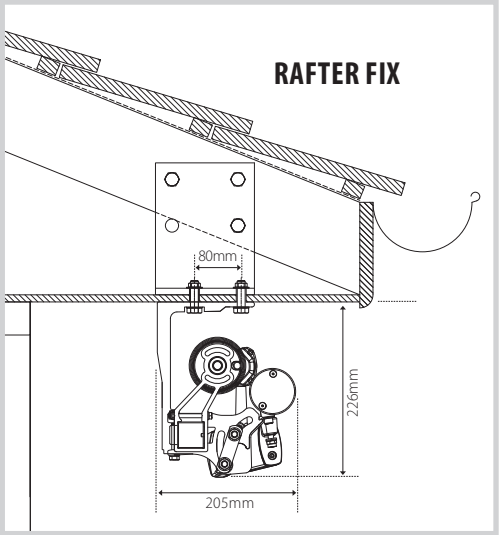

ROOF FIX

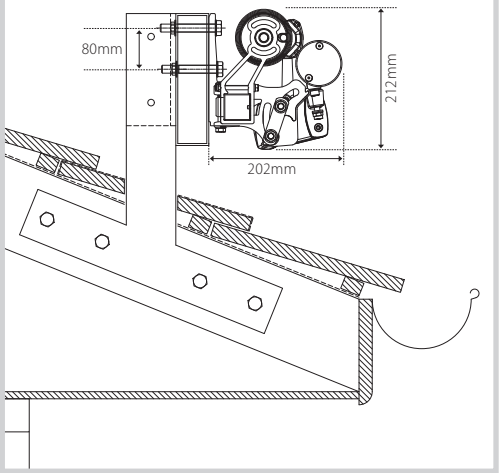

FOLDING ARM PITCH PROJECTION

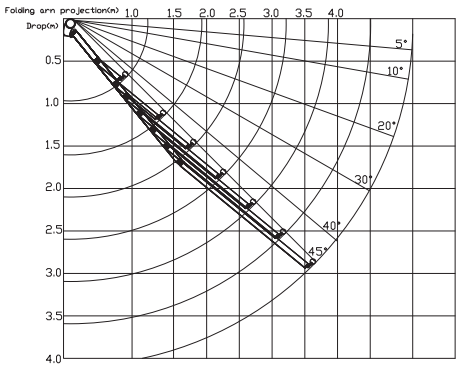

PLEASE NOTE: All illustrations are not to scale. All measurements are in millemetres. Ask your Covered representative for additional information if required.

AVAILABLE SIZES

WIDTH	Max. 7000mm (7m) / Min. 1940mm (1.94m)
PROJECTION	Max. 4000mm (4m) / Min. 1500mm (1.5m)

HEADBOX

MATERIAL	Powder Coated 6061 Grade Extruded Aluminium
DIMENSIONS	Height: 212mm top/bottom, Depth: 202mm front/back
FINISH	Standard finishes are WHITE, ANTHRACITE & SILVER or for custom select from Dulux Powder Coat Range.

TOP ROLLER

MATERIAL	78mm Diameter Heavy-Duty Galvanised Steel Tube

ARM ASSEMBLY

MATERIAL	6061 Grade Extruded Aluminium

END CAPS

MATERIAL	Powder coated cast aluminium providing a minimal profile appearance

FIXING METHODS

TYPE	FACE FIX, TOP FIX, FASCIA FIX, ROOF FIX and RAFTER FIX options available

CONTROL OPTIONS

CRANK OPERATION	Easy to use for dimensions up to 6000mm (6m) width and 3500mm (3.5m) projection with integrated gear-drive technology (GFT).
MOTORISED	Tubular motor mounted internally in top roller. Available: SIMU, SOMFY, ACMEDA or ALPHA.

FABRIC OPTIONS

RECOMMENDED	100% Solution Dyed Acrylics. Covered offers all the leading brands, colours and fabric trends.

SOLINA-PRO MOTORISED BRANDS

somfy | ROLLEASE ACMEDA | simu | alpha MOTORIZATION MADE EASY

5 YEAR WARRANTY

SOLINA-PRO STANDARD FRAME COLOURS

WHITE	ANTHRACITE	SILVER

CUSTOM POWER COAT COLOURS AVAILABLE ON REQUEST

YOUR NEAREST COVERED RETAILER

SOLIDUX®

© 2019 | COVERED GROUP | email: info@covered.sydney | www.covered.sydney